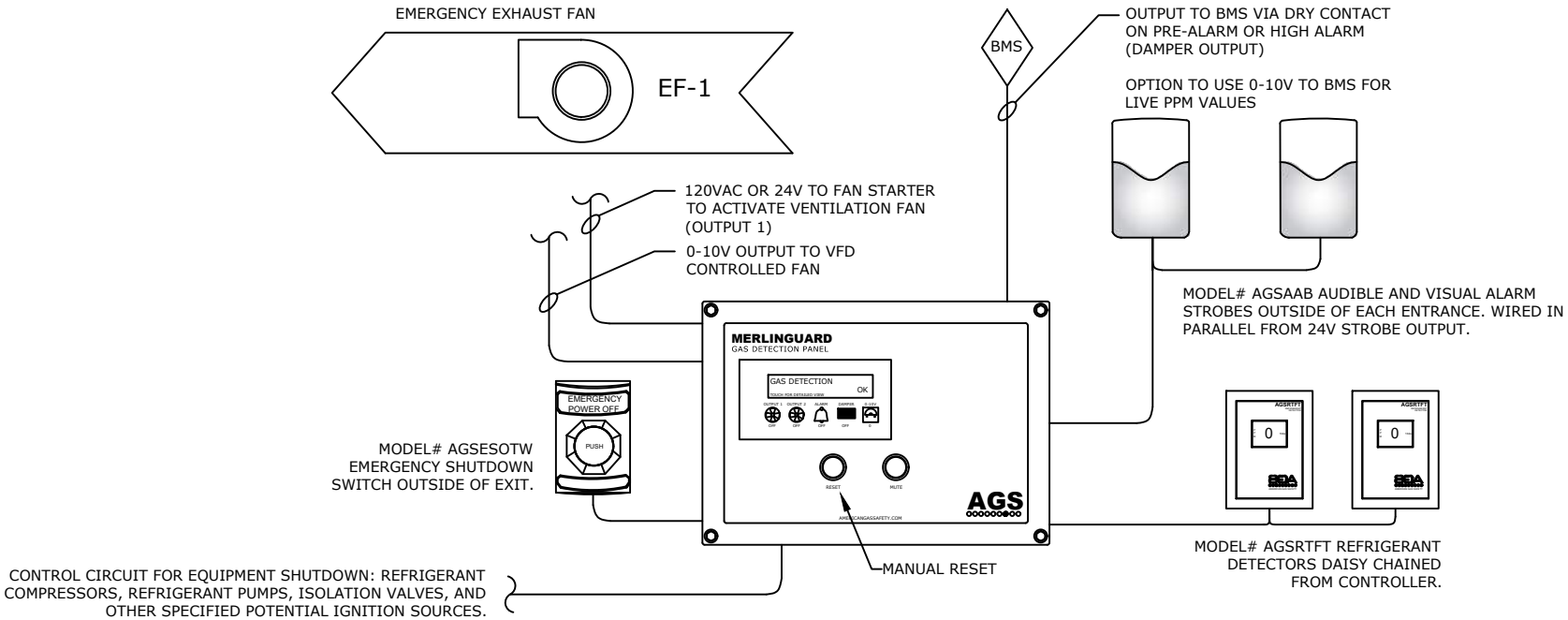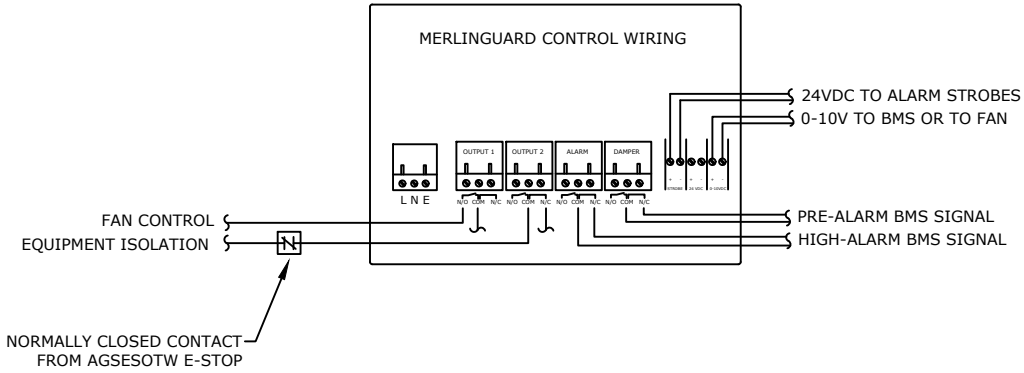A2L TYPE REFRIGERANT GASES