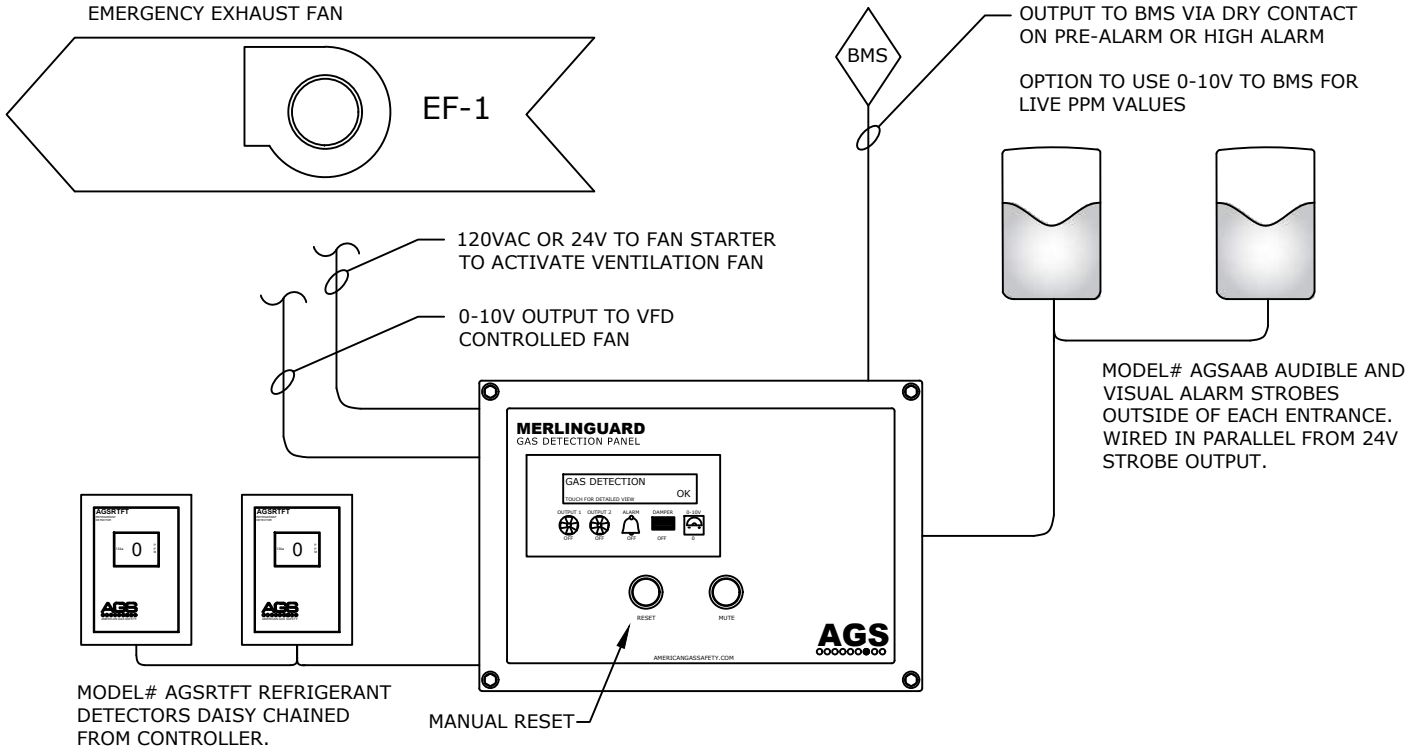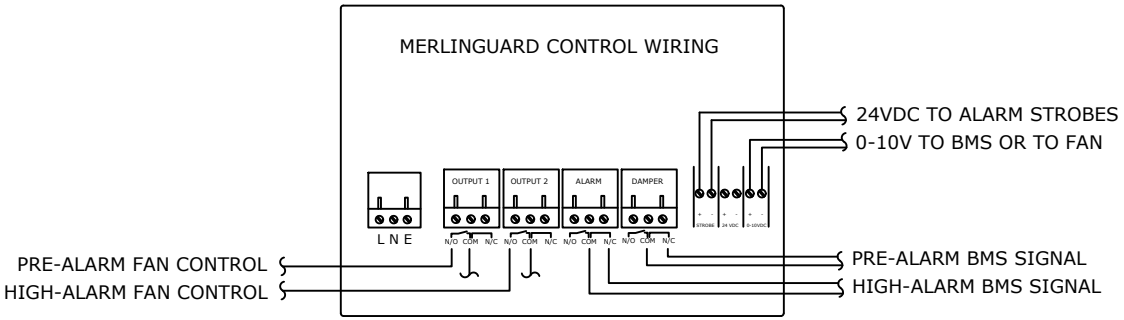A1 TYPE REFRIGERANT GASES