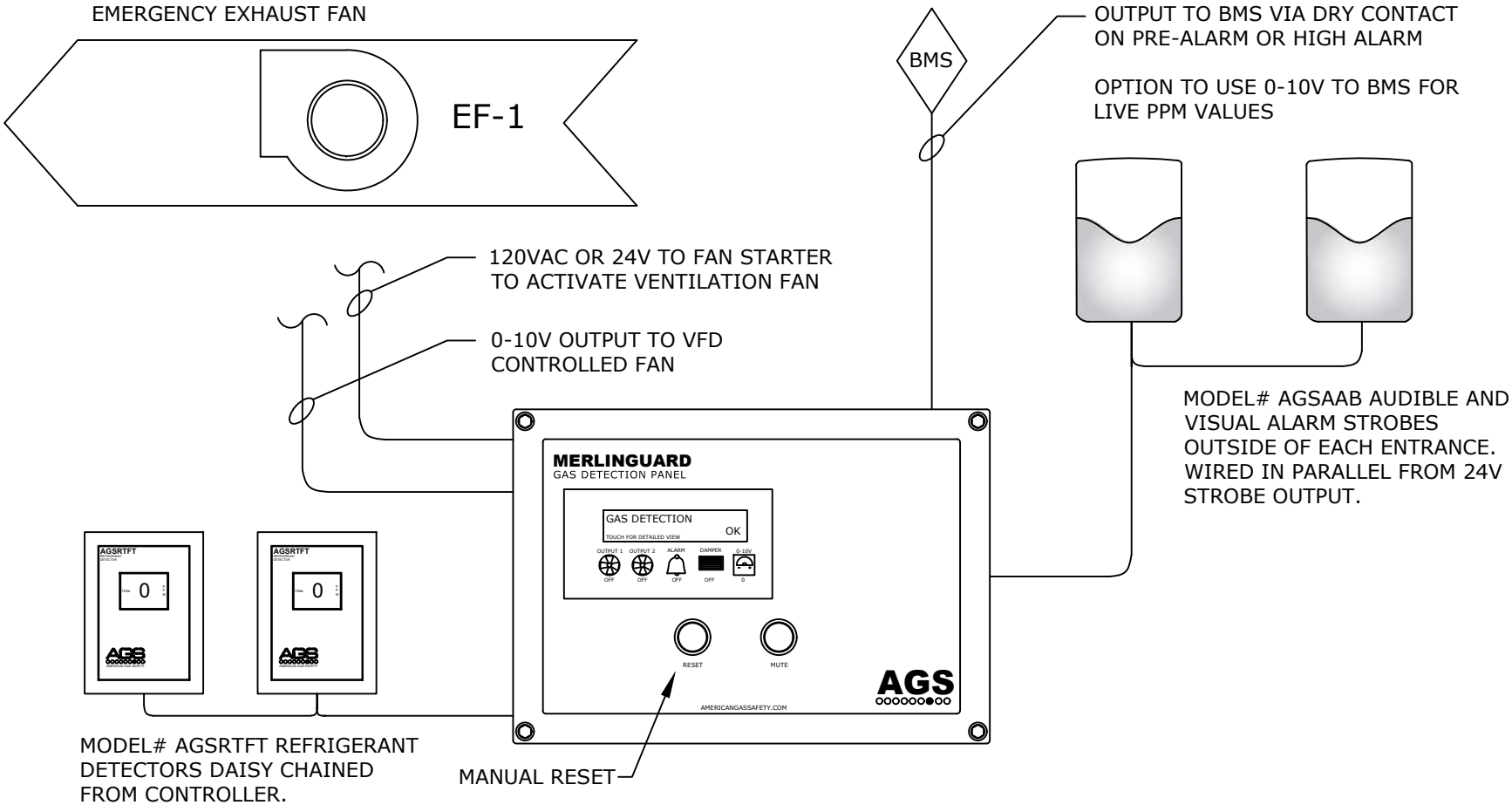
EMERGENCY EXHAUST FAN
EF-1
BMS
OUTPUT TO BMS VIA DRY CONTACT ON PRE-ALARM OR HIGH ALARM
OPTION TO USE 0-10V TO BMS FOR LIVE PPM VALUES
120VAC OR 24V TO FAN STARTER TO ACTIVATE VENTILATION FAN
0-10V OUTPUT TO VFD CONTROLLED FAN
MODEL# AGSAAB AUDIBLE AND VISUAL ALARM STROBES OUTSIDE OF EACH ENTRANCE. WIRED IN PARALLEL FROM 24V STROBE OUTPUT.
MERLINGUARD
GAS DETECTION PANEL
GAS DETECTION
OK
TOUCH FOR DETAILED VIEW
OUTPUT 1
OUTPUT 2
ALARM
DAMPER
0-10V
RESET
MUTE
AGS
AMERICANGASSAFETY.COM
AGSRTFT
MODEL# AGSRTFT REFRIGERANT DETECTORS DAISY CHAINED FROM CONTROLLER.
MANUAL RESET

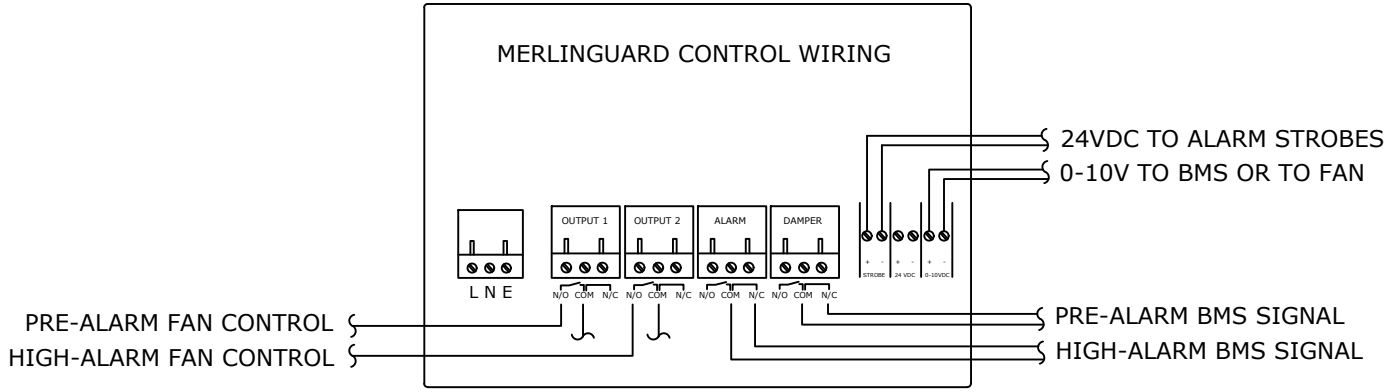
MERLINGUARD CONTROL WIRING
24VDC TO ALARM STROBES
0-10V TO BMS OR TO FAN
L N E
OUTPUT 1
OUTPUT 2
ALARM
DAMPER
N/O COM N/C
STROBE
24 VDC
0-10VDC
PRE-ALARM FAN CONTROL
HIGH-ALARM FAN CONTROL
PRE-ALARM BMS SIGNAL
HIGH-ALARM BMS SIGNAL

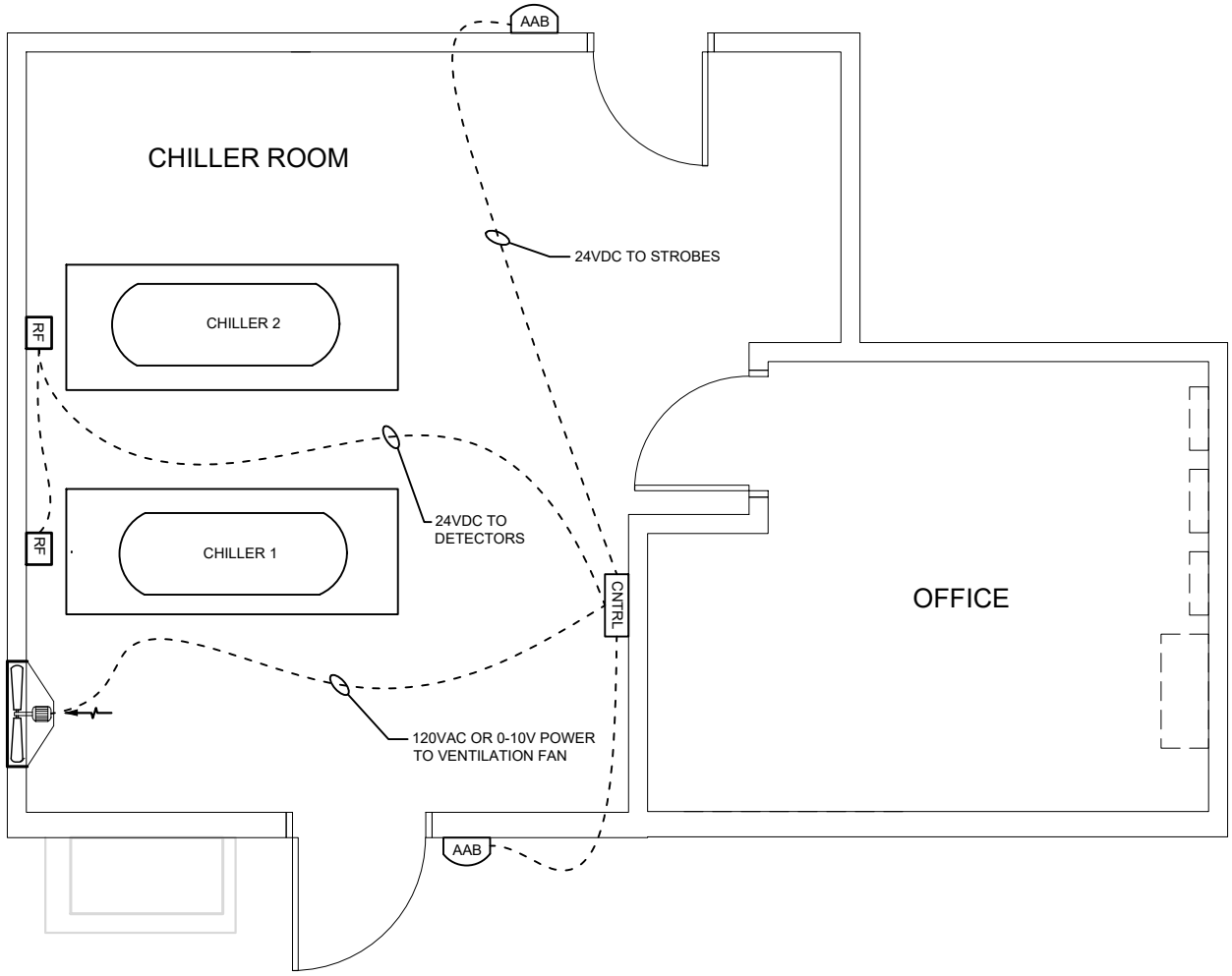
AAB
CHILLER ROOM
24VDC TO STROBES
CHILLER 2
RF
24VDC TO
DETECTORS
RF
CHILLER 1
CNTRL
OFFICE
120VAC OR 0-10V POWER
TO VENTILATION FAN
AAB

N.T.S.

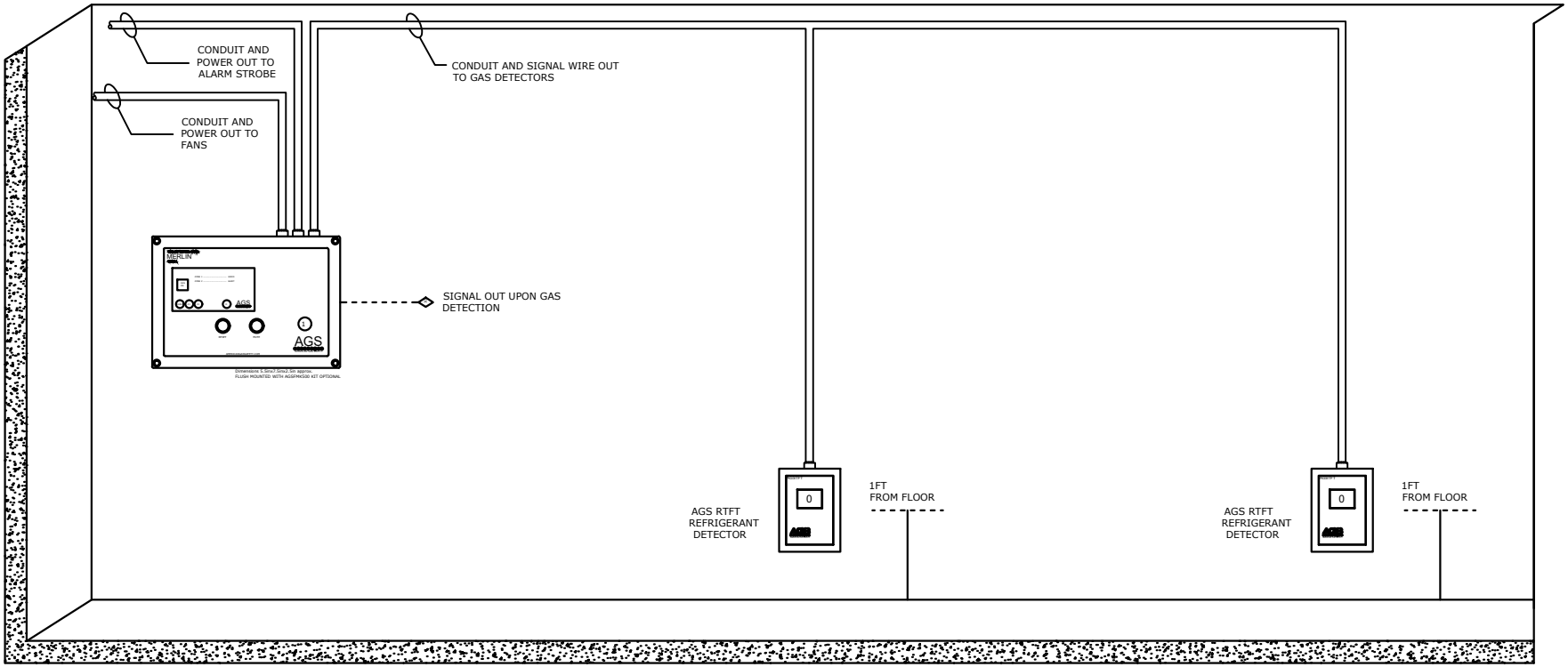
CONDUIT AND
POWER OUT TO
ALARM STROBE
CONDUIT AND SIGNAL WIRE OUT
TO GAS DETECTORS
CONDUIT AND
POWER OUT TO
FANS
MERLIN
AGS
AGS
SIGNAL OUT UPON GAS
DETECTION
Dimensions 9 Wx7 Hx2.5in approx.
FLUSH MOUNTED WITH AGSFRMS30 KIT OPTIONAL
AGS RTFT
REFRIGERANT
DETECTOR
1FT
FROM FLOOR
AGS RTFT
REFRIGERANT
DETECTOR
1FT
FROM FLOOR