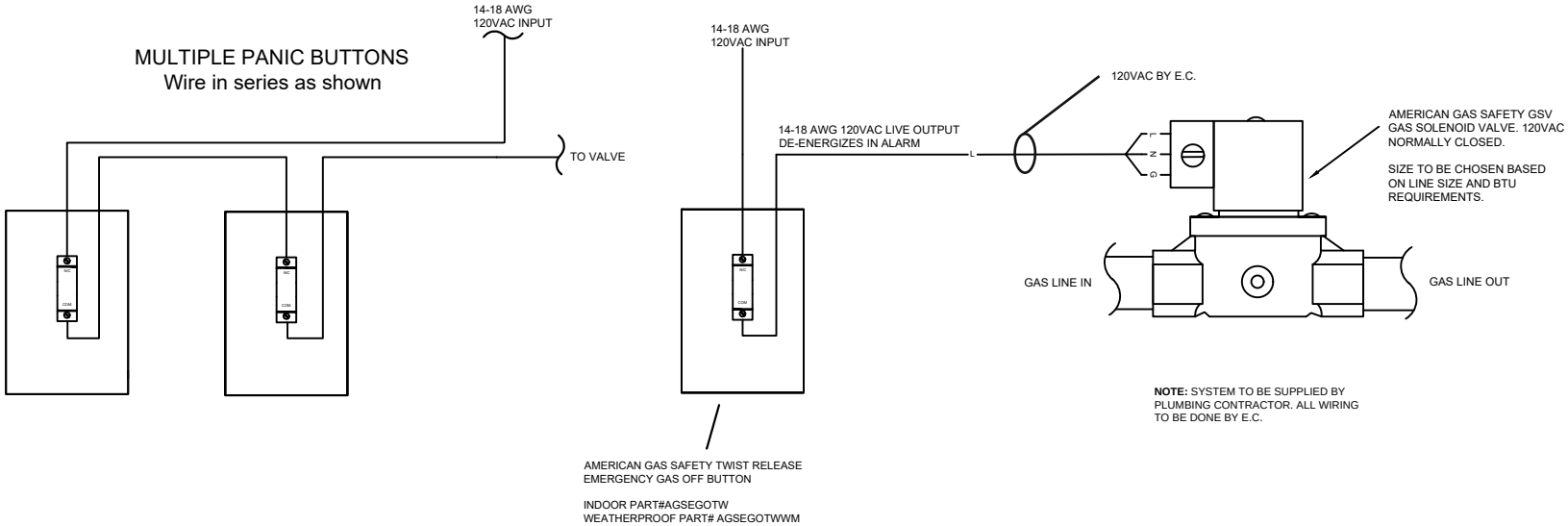PANIC BUTTON GAS VALVE