AMERICAN GAS SAFETY

AGSADS Datasheet

Air Pressure Differential Switch

Product Overview

The AGSADS air pressure differential switches are used to monitor air flow in areas such as commercial kitchens. Electrical connections are made by use of two-core cable. Incorporated in each AGS Ventilation Interlock system is a 10 seconds Airflow dropout delay. In the event of interruptions to airflow for less than 10 seconds the delay will allow the gas solenoid valve to remain open, preventing nuisance tripping. Should the airflow be interrupted for 10 seconds or more the fan fault LED will illuminate and the gas solenoid valve will close.

Key Features

- Filter monitoring
- Correct fan functioning control
- Low pressure and over pressure monitoring
- Differential pressure for air controls
- Alarm activation at a pre-set value
- Comes with 40" ducting tube and probe

Circuit Board Diagram

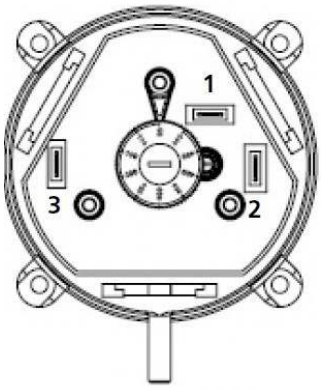

1. **N/C Contact**
2. **N/O Contact**
3. **Common**

When wiring to a AGS Merlin unit please use terminals 2 & 3.

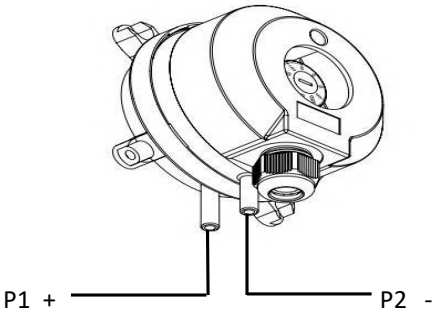

The P1+ tube connects into the ventilation system before the fan.

The P2 – is commonly left open to atmosphere, although to increase the sensitivity ofthe PD switch you can locate the additional tube to after the fan.

Technical Specifications

Contact	1 snap-action pole change over contacts
Switch Capacity	5 (0.8) A, 250Vac
Differential	Fixed
Working Temp	-22~+185 °F
Max Pressure	1.08 psi (< 167 167 °F); 0.76psi (> 167 °F)
Diaphragm	Silicon
Storage	-22~+185 °F
Housing	PA/ABS/POM Protection: IP54

Find out more

American Gas Safety LLC

www.americangassafety.com

Head office:
6304 Benjamin Road, Suite 502, Tampa, FL 33634

Tel: (727) 608-4375
Email: info@americangassafety.com