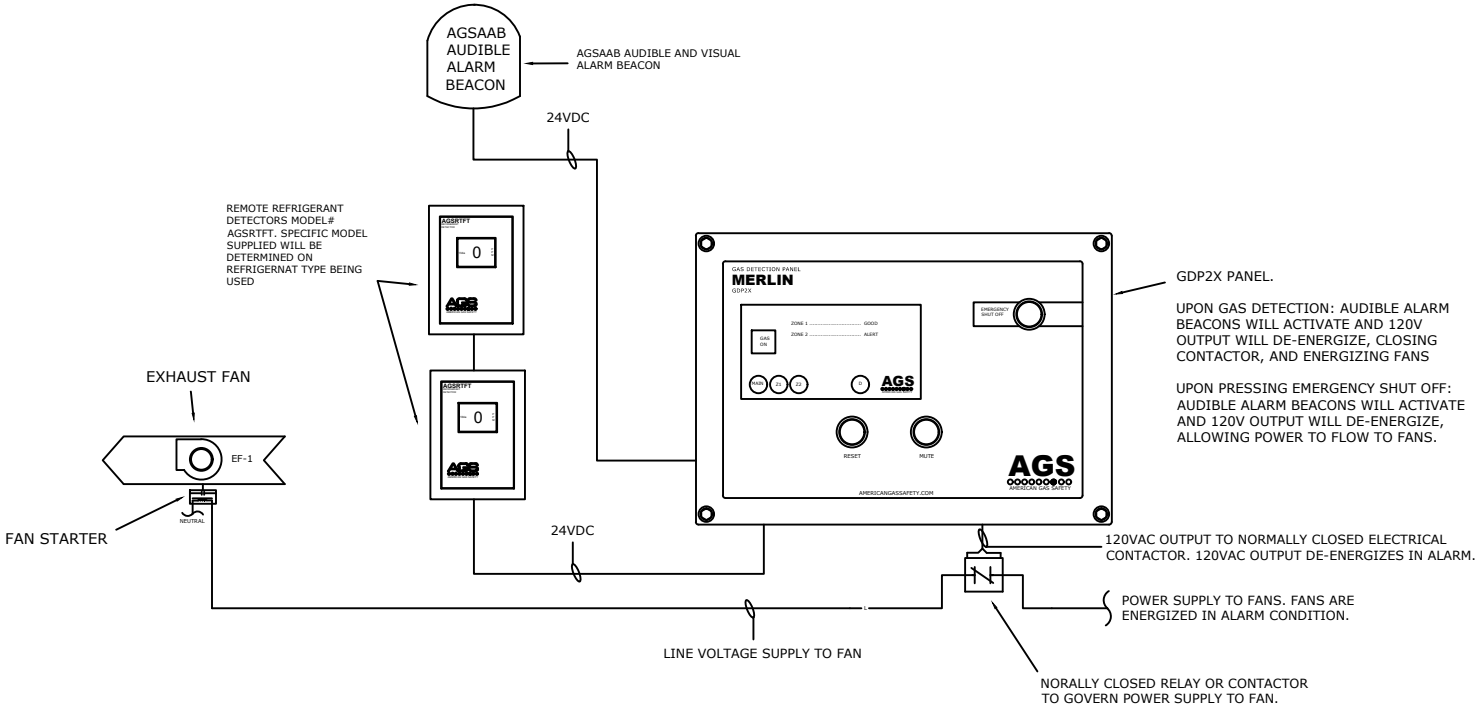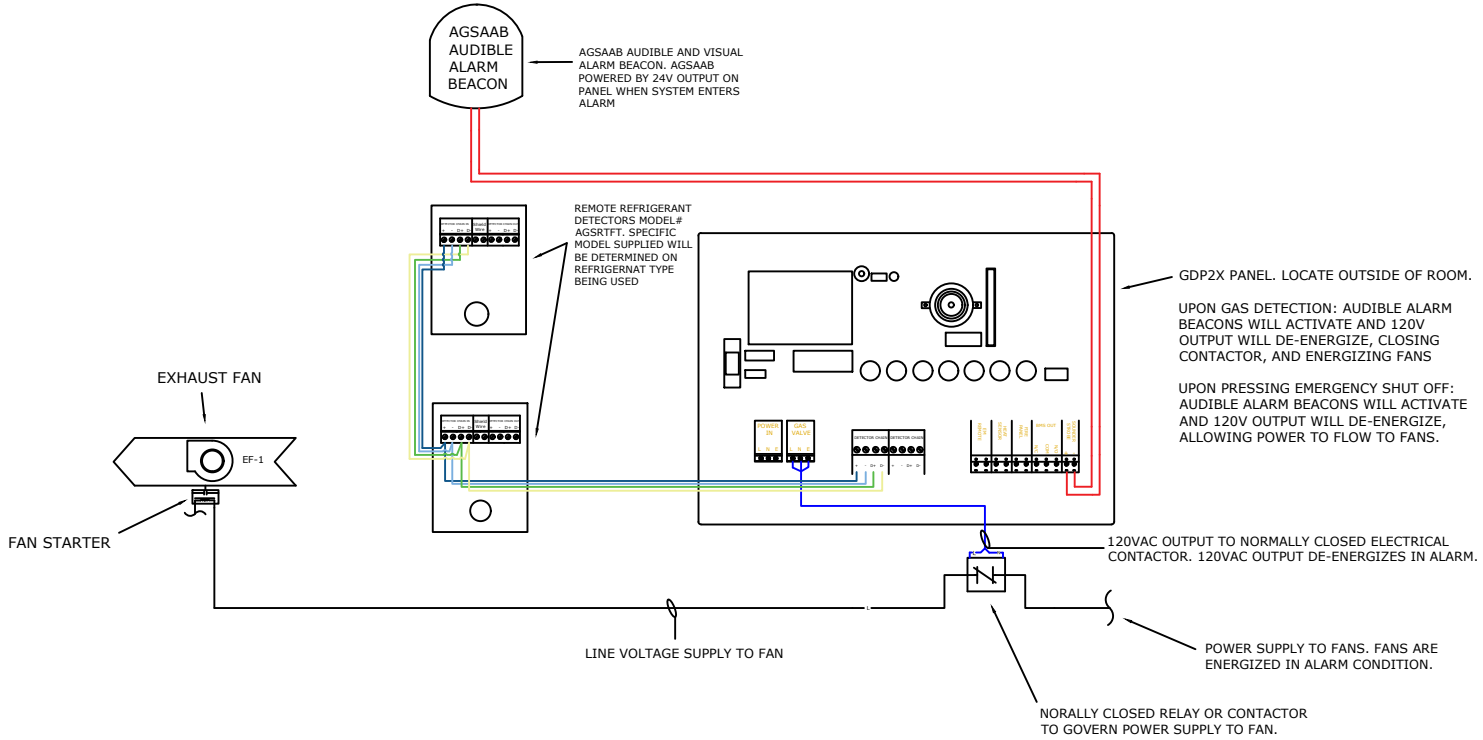CHILLER ROOM DETECTION SYSTEM