Merlin FS1

Single Fan Switch

User Guide

Please read this guide carefully and retain for future use.

Contents

1 General Information 3

1.1 Panel Mounting 3

2 Installation & Operation 4

2.1 Power Supply 4

2.2 Fan Connections 4

2.3 System ON & OFF 4

2.4 LED Status (Fan On) 4

2.5 Manual Override 4

2.6 How to Select Power-Down Delay in Automatic Mode 4

3 FS1 Wiring Diagram 5

4 Technical specifications 5

5 Manufacturer's Warranty 6

1 General Information

The FS1 is a microcontroller based single fan switch to automatically switch fan ON and OFF. The panel also features a selectable power off delay to allow residual fumes to dissipate and a manual override.

The FS1 has been designed to work together with the Merlin range of utility systems to add extra functionality and provide simplicity to the user.

It is recommended that the user reads this guide before using the system. Please do NOT attempt to operate the unit until the contents of this document have been read and are thoroughly understood.

1.1 Panel Mounting

The control panel is designed for surface mounting using 4 mounting screws. A flush mount kit is available (sold separately). Contact your supplier.

Important Warning Statements

Never ignore your device when in alarm.

This device requires a continual supply of electrical power – it will not work without power.

This device should not be used to substitute proper installation, use and/or maintenance of fuel burning appliances including appropriate ventilation and exhaust systems.

Your product should reach you in perfect condition, if you suspect it is damaged, contact your supplier.

Information on waste disposal for consumers of electrical & electronic equipment. (EEE)

When this product has reached the end of its life it must be treated as Waste Electrical & Electronics Equipment (WEEE). Any WEEE marked products must not be mixed with general household waste, but kept separate for the treatment, recovery and recycling of the materials used.

Please contact your supplier or local authority for details of recycling schemes in your area.

2 Installation & Operation

2.1 Power Supply

The FS1 should be connected to the Merlin panel using 3-core low voltage cable [terminals marked 1 2 3]. - See wiring diagram

2.2 Fan Connections

A single fan should be connected to the [OUT1] terminal block [L1,N and E]. Dry contact outputs are available for fan speed controllers.
See wiring – Section 3.

2.3 System ON & OFF

While Merlin utility panel is switched ON, the FS1 will power the fan automatically when panel is in error condition.
The [FAN ON] indicator will illuminate.

When error condition is cleared, the FS1 will turn the fans off instantly or at a pre-selected time delay (purge). The [FAN ON] indicator LED will flash. To cancel purge mode, the manual override switch has to be turned ON and OFF again.

2.4 LED Status (Fan On)

(RED) – Power to fan enabled
(FLASHING) – Purge mode
(NO LED) – Power to fan disabled

2.5 Manual Override

The ON and OFF switch mounted on the fascia of the FS1 panel can be used to manually turn the fan ON and OFF without using the associated Merlin utility controller.

There is no-power down time delay in the manual override mode.

2.6 How to Select Power-Down Delay in Automatic Mode

S1	S2	MIN	STATUS
OFF	OFF	60	Power to the fans will be removed 60 minutes after the Merlin utility controller is turned off or in fault condition.
ON	OFF	40	Power to the fans will be removed 40 minutes after the Merlin utility controller is turned off or in fault condition.
OFF	ON	20	Power to the fans will be removed 20 minutes after the Merlin utility controller is turned off or in fault condition.
ON	ON	0	No delay. Power to the fans will be removed instantly when the Merlin utility controller is turned off or in fault condition.

3 FS1 Wiring Diagram

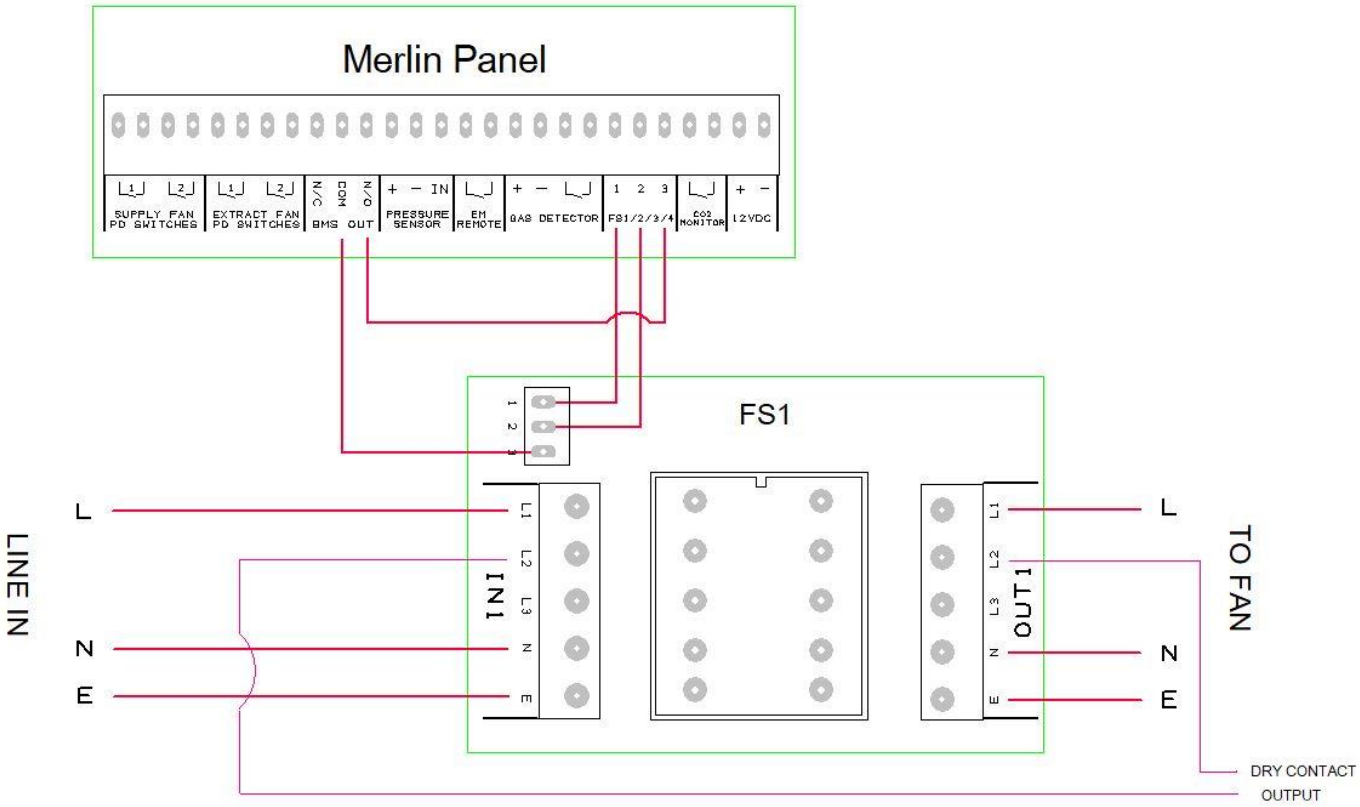

***IMPORTANT**

BMS Selection DIP switch on Merlin utility panel has to be set to ON position

4 Technical specifications

Model	FS1
Power Supply	12VDC from Merlin panel.
Current consumption	50mA @ 12V without load
Power consumption	0.6W without load
Maximum fan rating	(110V) 12A
Dry contact output	(110V) 12A Max
Operating temp. range	32 - 122°F
Body size	W 7.48" x H 5.51" x D 2.36"
Net Weight	28.2oz (0.8 kg)

5 Manufacturer's Warranty

3 Year Limited Warranty

Warranty coverage: The manufacturer warrants to the original consumer purchaser, that this product will be free of defects in material and workmanship for a period of three (3) years from date of purchase. The manufacturer's liability hereunder is limited to replacement of the product with repaired product at the discretion of the manufacture. This warranty is void if the product has been damaged by accident, unreasonable use, neglect, tampering or other causes not arising from defects in material or workmanship. This warranty extends to the original consumer purchaser of the product only.

Warranty disclaimers: Any implied warranties arising out of this sale, including but not limited to the implied warranties of description, merchantability and intended operational purpose, are limited in duration to the above warranty period. In no event shall the manufacturer be liable for loss of use of this product or for any indirect, special, incidental or consequential damages, or costs, or expenses incurred by the consumer or any other user of this product, whether due to a breach of contract, negligence, strict liability in tort or otherwise. The manufacturer shall have no liability for any personal injury, property damage or any special, incidental, contingent or consequential damage of any kind resulting from gas leakage, fire or explosion. This warranty does not affect your statutory rights.

Warranty Performance: During the above warranty period, your product will be replaced with a comparable product if the defective product is returned together with proof of purchase date. The replacement product will be in warranty for the remainder of the original warranty period or for six months – whichever is the greatest.

For all correspondence:

AGS Head Office
Tel: (727) 608-4375
Fax: (727) 538-4237
info@americangassafety.com

AMERICAN GAS SAFETY

American Gas Safety is the owner of this document and reserves all rights of modification without prior notice.