DESIGNED TO MEET NEMA 1, 2, 4, 4X, 12, 13 AND IP-66
UL LISTED AND TESTED TO UL508A. UL FILE #E194432

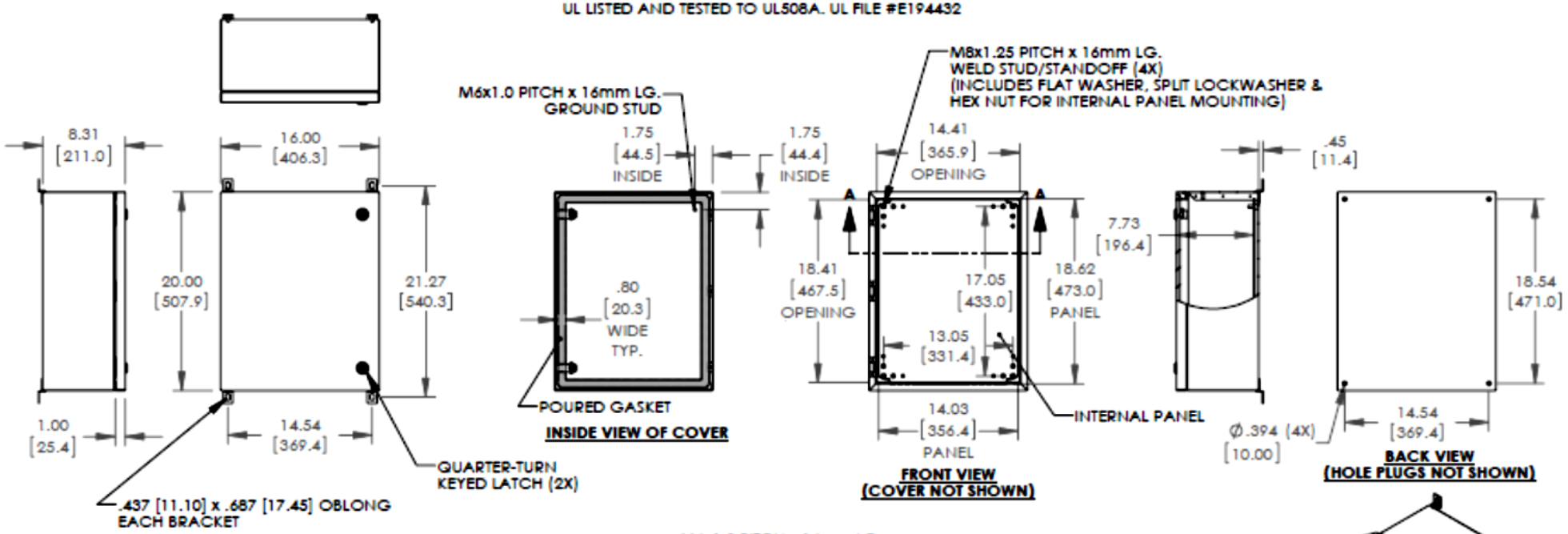

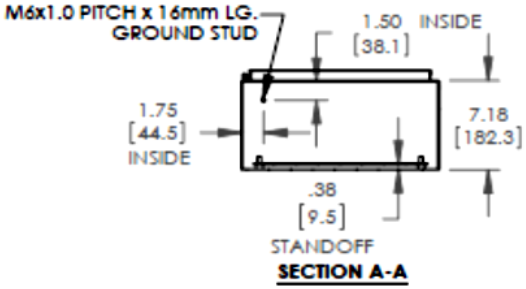

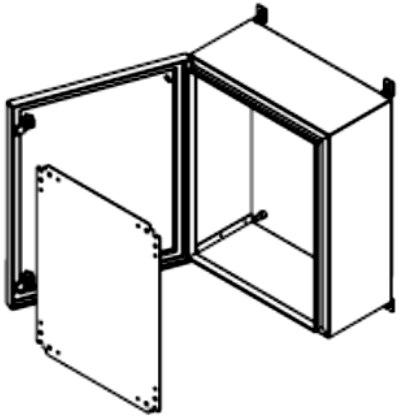

MATERIAL:
- BODY & COVER - 16 GA. [1.5mm] TYPE 304 STAINLESS STEEL
- INTERNAL PANEL - 14 GA. [2.0mm] C.R.S.
- WALL MOUNTING BRACKETS - 14 GA. [2.0mm] TYPE 430 STAINLESS STEEL
- STRIKERS - 11 GA. STAINLESS STEEL 304
- HINGE PINS & WALL MOUNTING HARDWARE - TYPE 201 STAINLESS STEEL
- INTERNAL PANEL MOUNTING HARDWARE & GROUND STUD HARDWARE - PLAIN STEEL
- LATCHES - STAINLESS STEEL
- LATCH GASKET WASHER - BLACK ACRYLONITRILE-BUTADIENE RUBBER
- POURED GASKET - BLACK POLYURETHANE FOAM
- SEALING WASHERS - BLACK NEOPRENE
- HOLE PLUGS - LIGHT GRAY NEOPRENE

FINISH:
- BODY & COVER - NATURAL, OUTSIDE SURFACES POLISHED
- INTERNAL PANEL, INTERNAL PANEL MOUNTING HARDWARE & GROUND STUD HARDWARE - CLEAR ZINC PLATED
- WALL MOUNTING BRACKETS, STRIKERS & HINGE PINS - NATURAL

SUPPLIED WALL MOUNTING BRACKET KIT CONTAINS:
- QTY. (4) WALL MOUNTING BRACKETS
- QTY. (4) HEX HEAD BOLT M10x1.5 PITCH x 19.5mm LG.
- QTY. (8) SEALING WASHERS
- QTY. (4) FLAT WASHERS M10
- QTY. (4) SPLIT LOCKWASHERS M10
- QTY. (4) HEX NUTS M10x1.5

SUPPLIED GROUNDING KIT CONTAINS:
- QTY. (1) GROUND WIRE 14-16 GA. YELLOW/GREEN WITH RING TERMINAL (M6) AT EACH END
- QTY. (4) FLAT WASHER M6
- QTY. (2) SPLIT LOCKWASHER M6
- QTY. (2) HEX NUT M6x1.0

AGSENC20168SS 20x16x8in

NEMA 4 Stainless Steel Finish
Wall Mounted or Semi – Recessed

AGS AMERICAN GAS SAFETY

Tel: (727) 608-4375

Fax: (727) 538-4237

info@americangassafety.com