Part number:

AGS-EPOKL

Product Overview

The AGS-EPOKL, multipurpose push button to be used for a wide range of applications commonly used with the AGS Merlin range of gas safety systems.

The AGS– EPOKL is key re-set, flush mounted and comes with a clear protective cover to prevent accidental activations.

Key Features

- Protects against vandalism, accidental damage, dust and grime.
- Indoor use only
- Key Lock Release Reset
- ADA Compliant.

General Information

· Three year guarantee against breakage of polycarbonate in normal use (one year on electromechanical and electronic components).

Design

· Unique, curved design helps protect against accidental activation.

Construction

· Station housing molded of tough polycarbonate.

· UL Listed to U.S. and Canadian safety standards.

Installation

· 5VA flammability rating on backplate

and spacer.

· Typical working properties of polycarbonate are -40° to 250°F

(-40° to 121°C).

· Polycarbonate complies with FDA regulations for food contact applications.

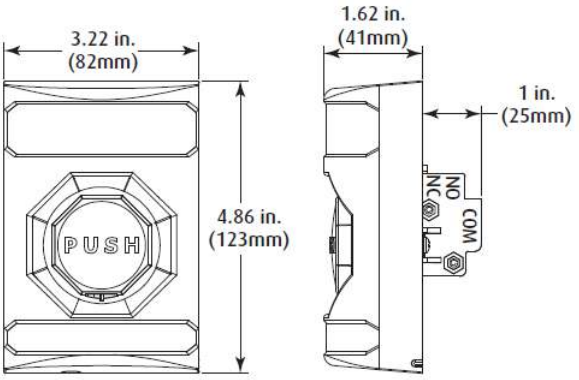

MODELS
WITHOUT BACK BOX

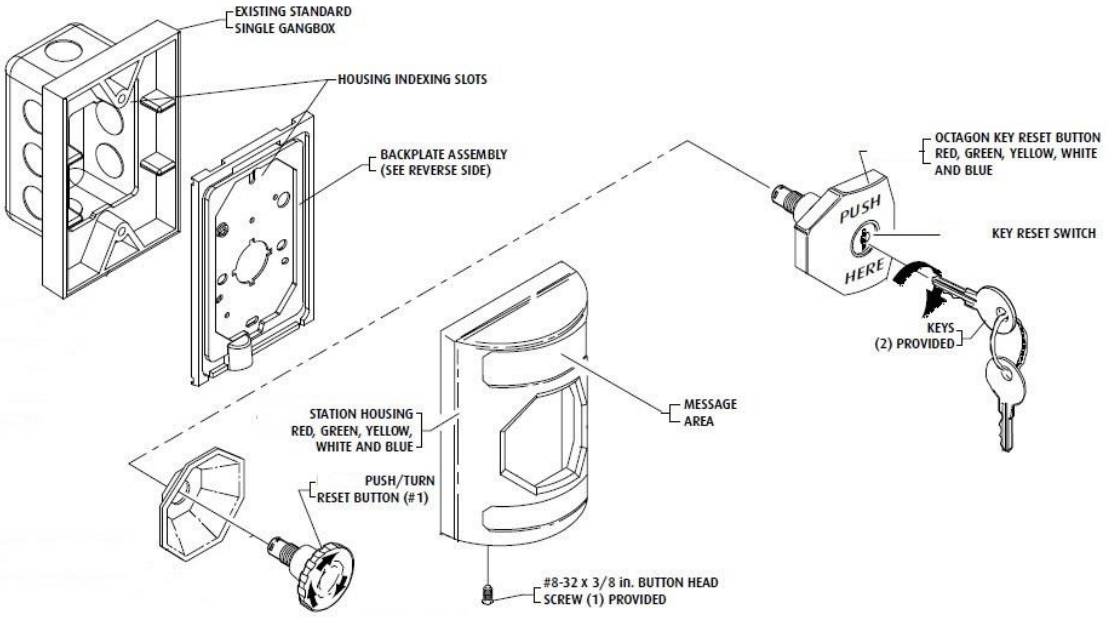

Important Notice

The Universal Stopper is intended to be used in areas where the incidence of false fire alarms from manual pull stations is high or has proven to be a serious problem. Any disadvantage of this device is more than balanced when one considers the consequences of false fire alarms, especially if fire service personnel and equipment are responding to a false fire alarm when they are needed for a real fire somewhere else. Add to this, the disruption to the facility when false alarms occur. If you have, or may have, a problem with false fire alarms or physical/weather damage to your fire alarm activation devices, the Universal Stopper could prove invaluable.

AGS Head Office

Tel: (727) 608-4375

Fax: (727) 538-4237

info@americangassafety.com